NOTES:

1). OVERLOAD RELAY SETTING: MOTOR FLC X 0.58.
2). X2 TERMINAL GROUNDED AS STANDARD, REMOVE IF NOT REQUIRED.
3). MI STANDS FOR MECHANICAL INTERLOCK.
4). TIMING RELAY GMETV WYE DELTA TIMER

CONTROL CIRCUIT (OPTION S/S)

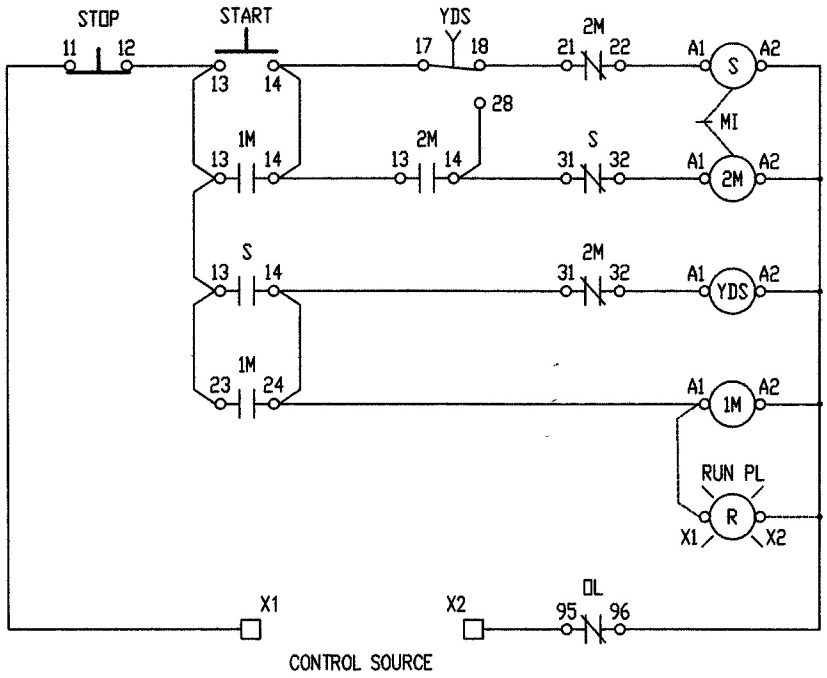

TERMINALS

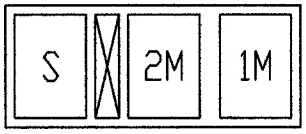

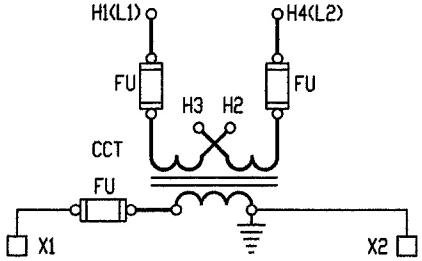

OPTION CONTROL TRANSFORMER

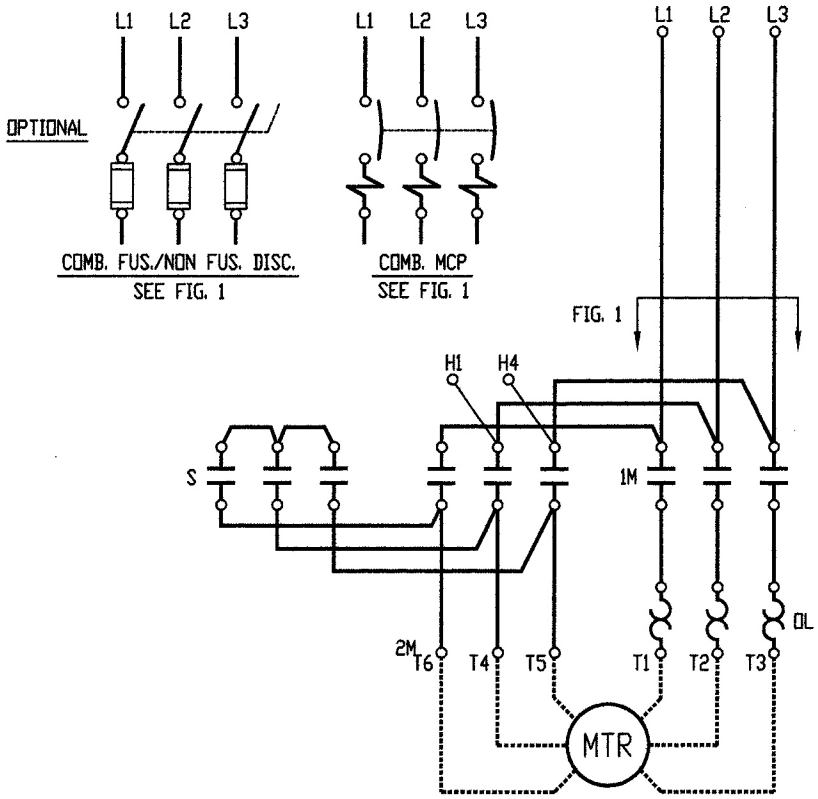

3 PHASE MOTOR

WARNING

HAZARDOUS VOLTAGE
WILL CAUSE DEATH OR SERIOUS INJURY.
TO AVOID ABOID ELECTRICAL SHOCK OR BURN
TURN OFF MAIN AND CONTROL VOLTAGES
BEFORE PERFORMING INSTALATION OR
MAINTENANCE

REV	DESCRIPTION	DATE	APP'D	DRAWN LR	Description	Electrical and Electronic Controls, Inc. 3881 Danbury Rd Brewster NY, 10509 USA (845)-278-5777 Fax (845)-278-5444 Email: info@eecontrols.com www.eecontrols.com
				CHECKED TG	AEG Wye Delta Starter Open Transition	
				APPROVED		Drawing No. WD-YD230D
				DATE 10/05/07		REV. 0